The European ALMA Antennas: When Technology becomes Science

2016-06-14

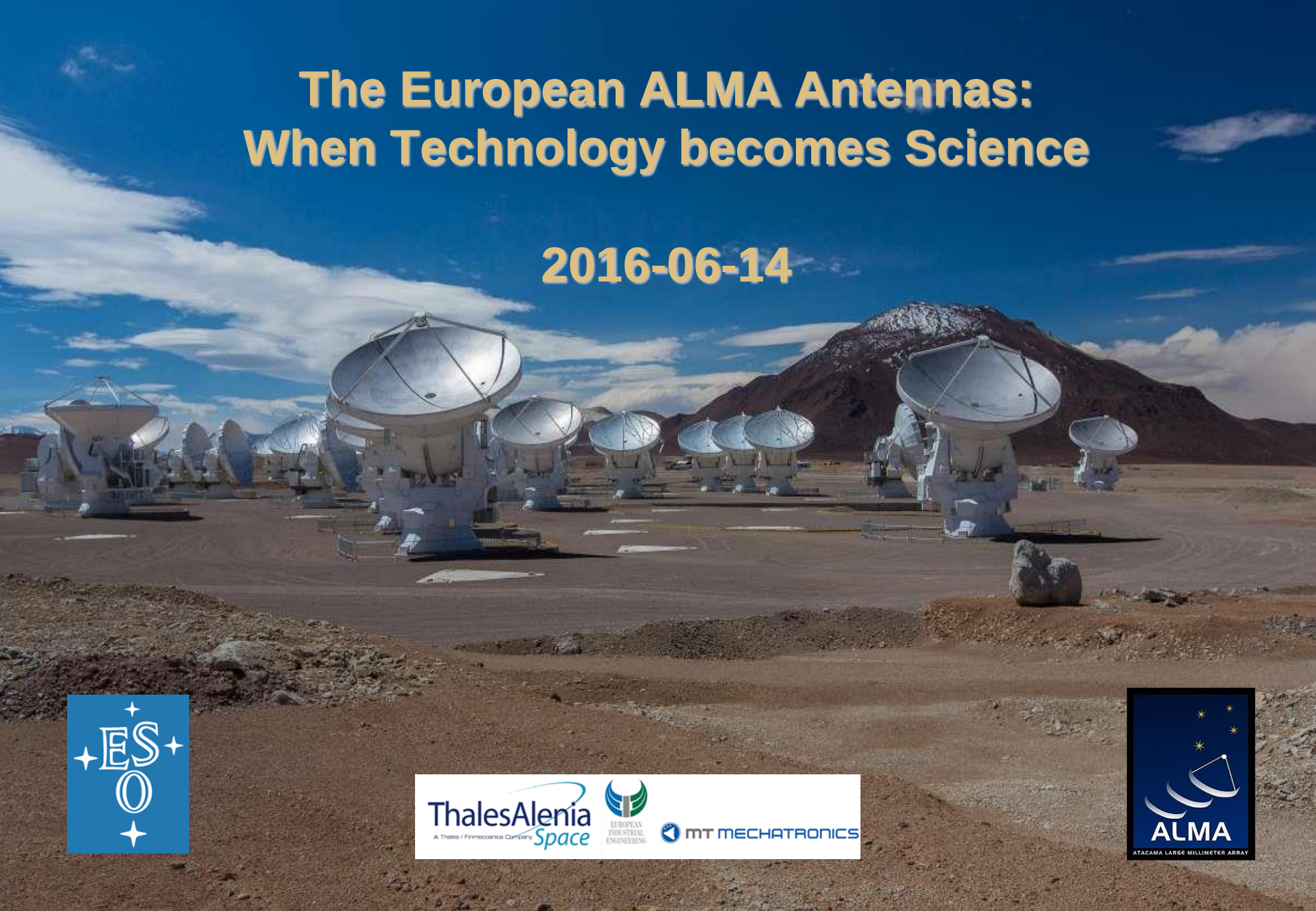

Contents

1 – A Worldwide Project

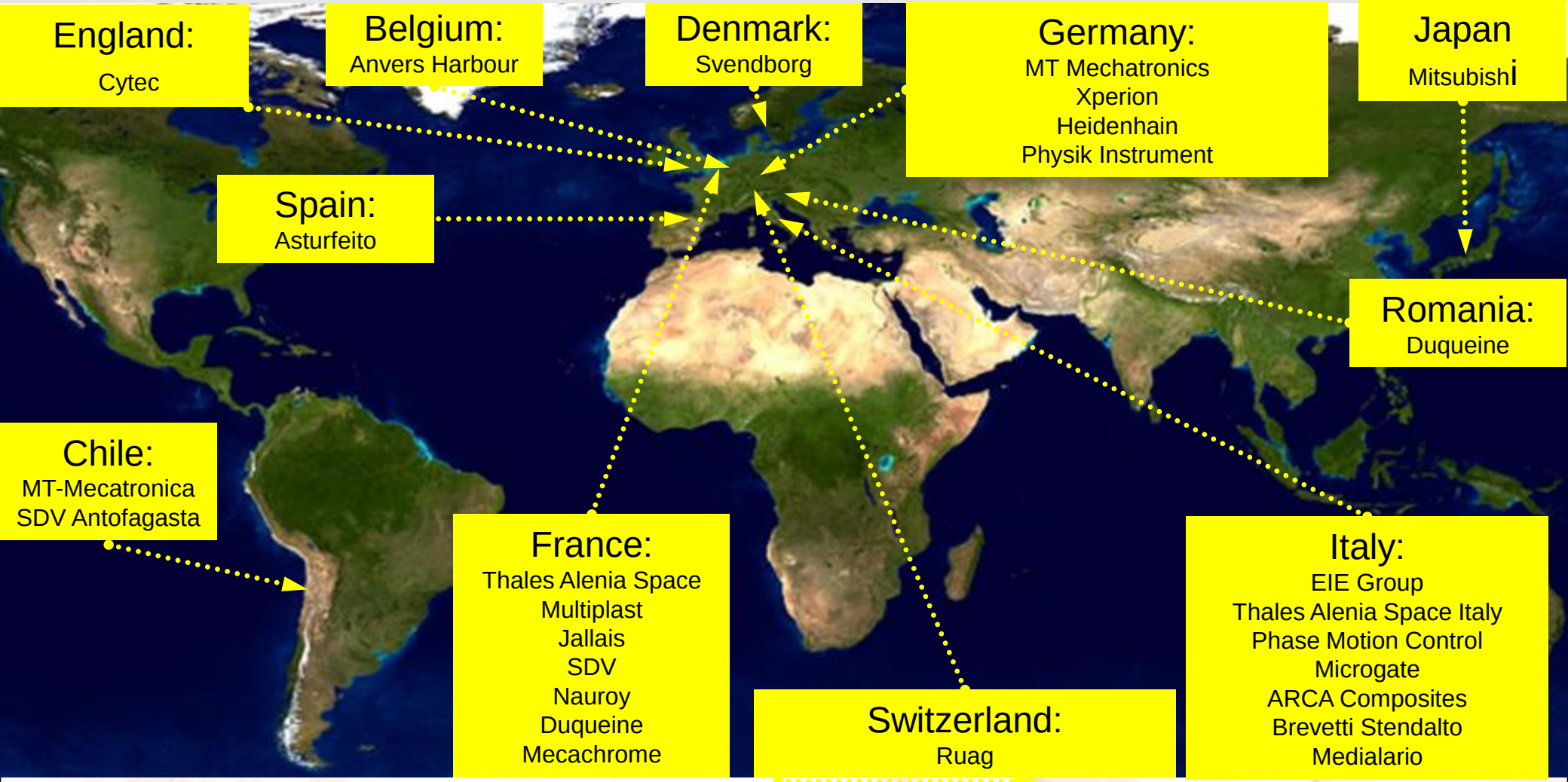

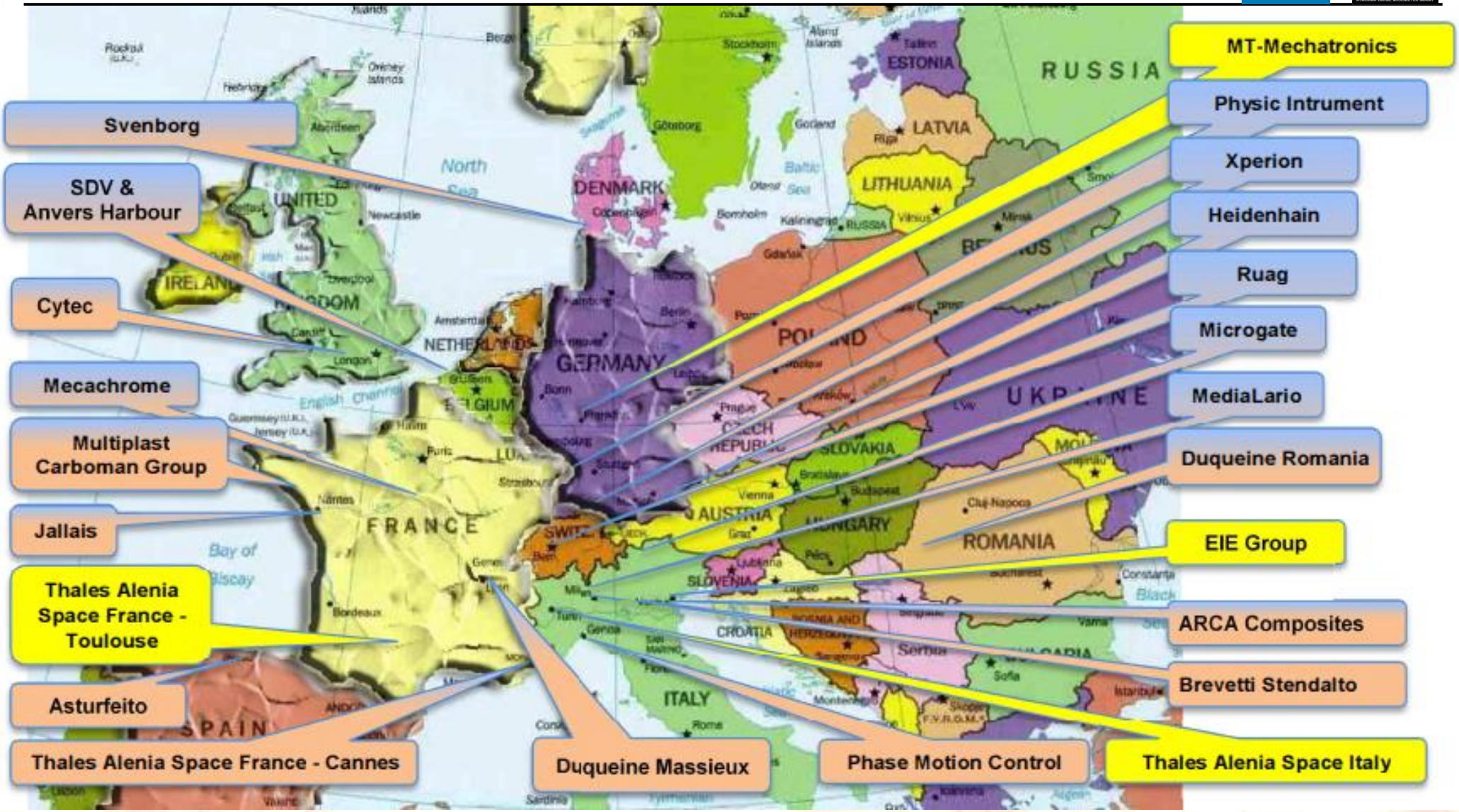

The European ALMA Antennas: when Technology becomes Science

Engineering: Key features of European Design

Engineering: Key features of European Design

ALMA Key Specifications

Diameter	12m
Surface accuracy	25 µm rms (goal 20 µm)
Absolute Pointing	2 arcsec rms
Offset Pointing	0.6 arcsec rms
Pathlenght stability	15 µm (over 3')
Tracking accuracy	better than 0.6 arcsec
Fast switching	required between target & calibrator (1.5° in 1.5s)
Frequency range	extending from 30 GHZ to 950 GHZ.

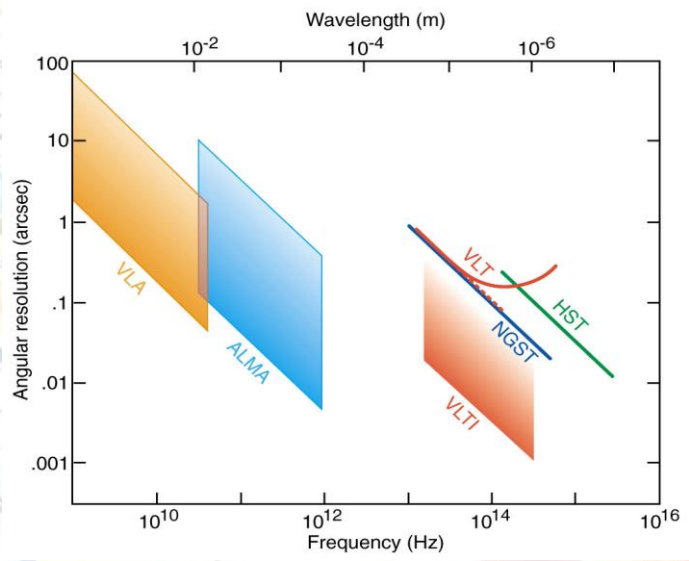

European ALMA Antennae Project

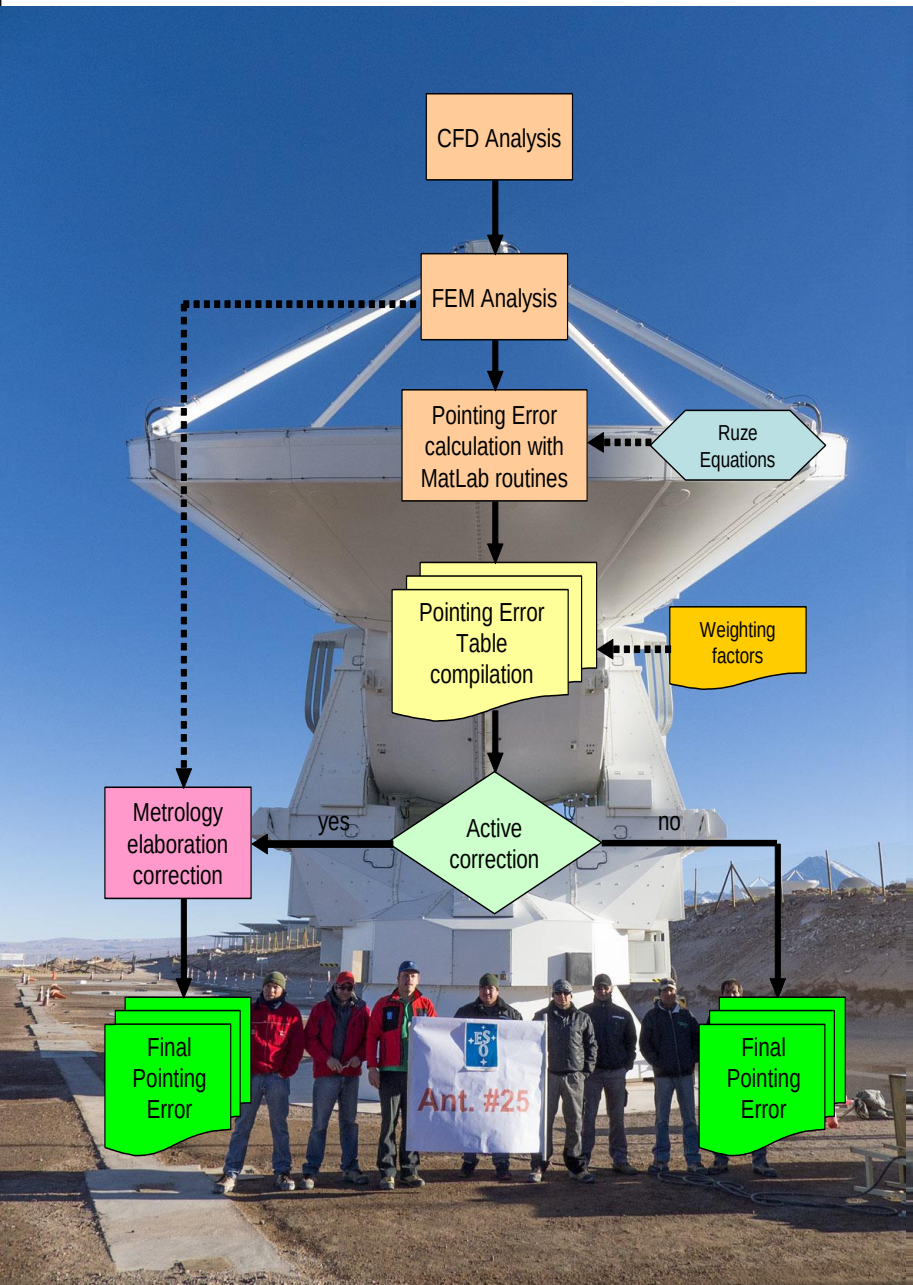

The delivery of the last European Antenna: 1 Octobre 2013

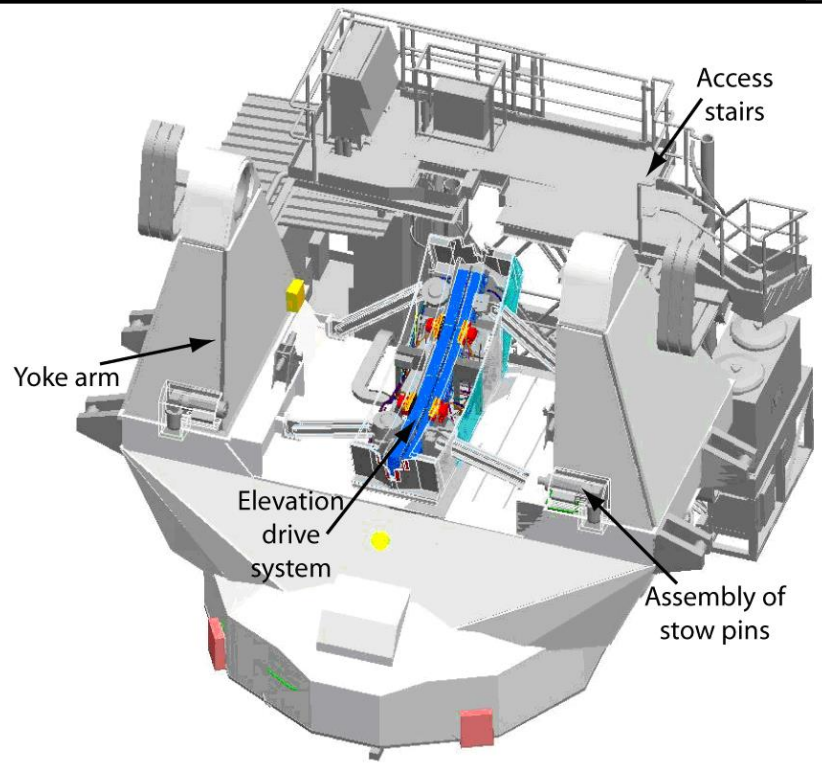
Access stairs
Yoke arm
Elevation drive system
Assembly of stow pins

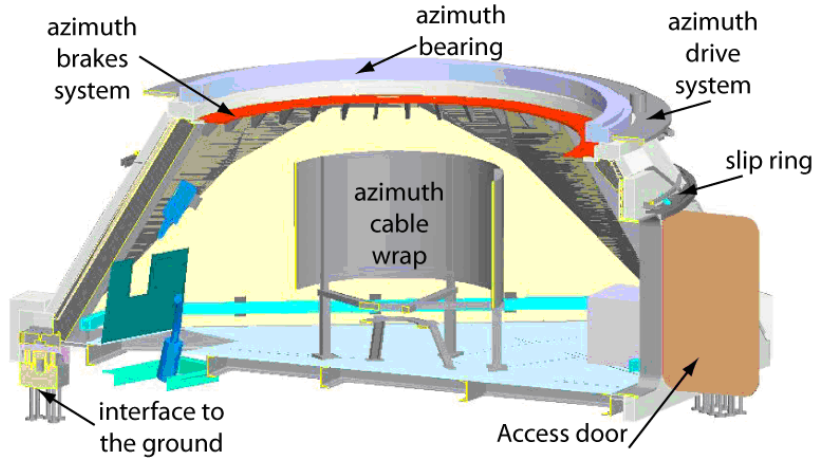
azimuth brakes system
azimuth bearing
azimuth drive system
slip ring
azimuth cable wrap
interface to the ground
Access door

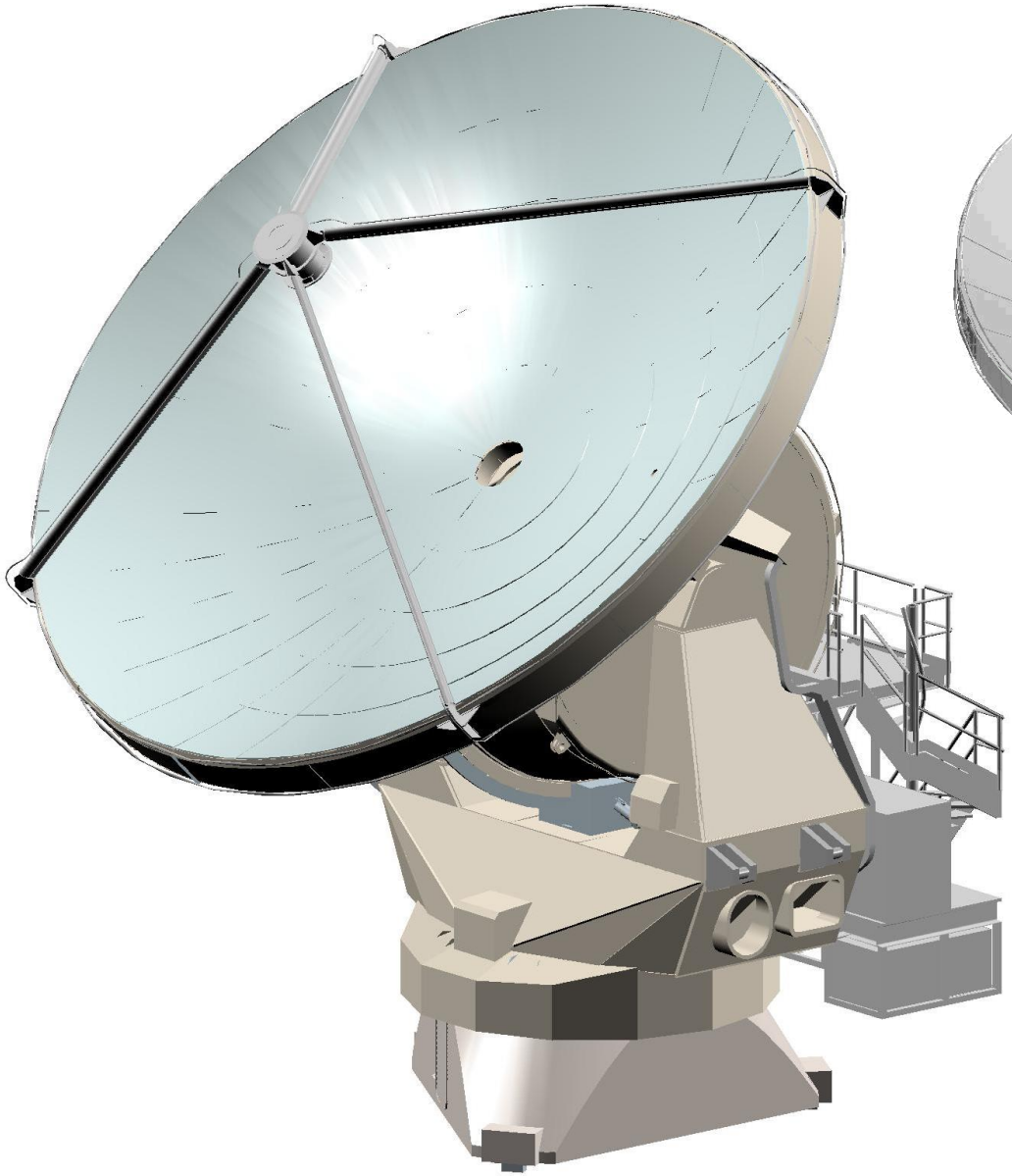

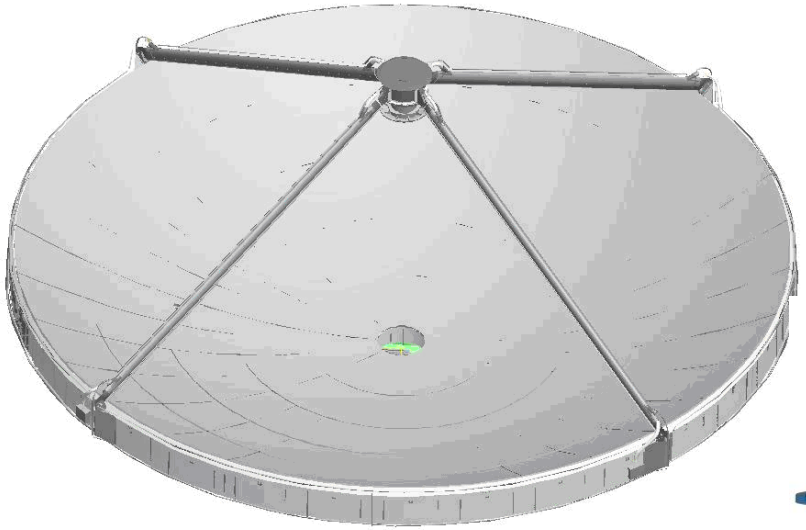

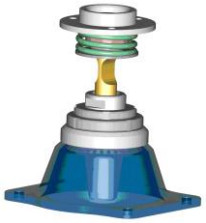

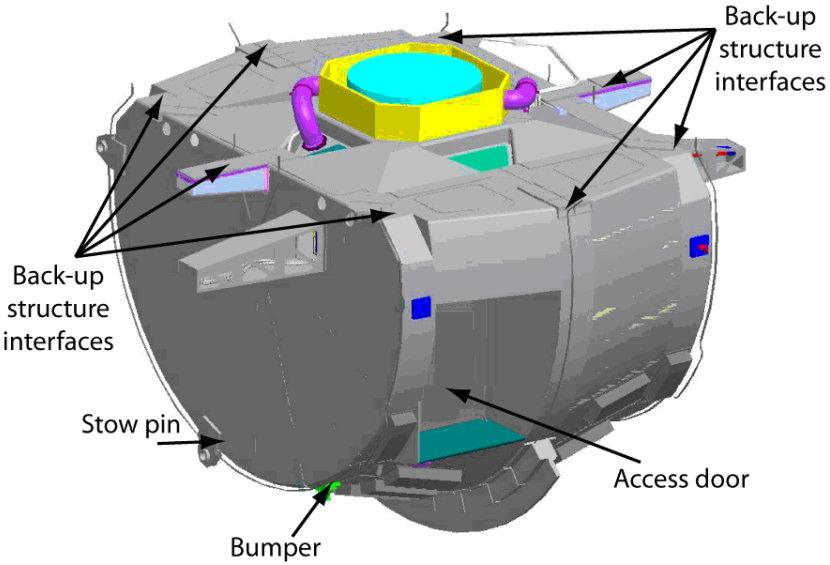
Back-up structure interfaces
Back-up structure interfaces
Stow pin
Access door
Bumper

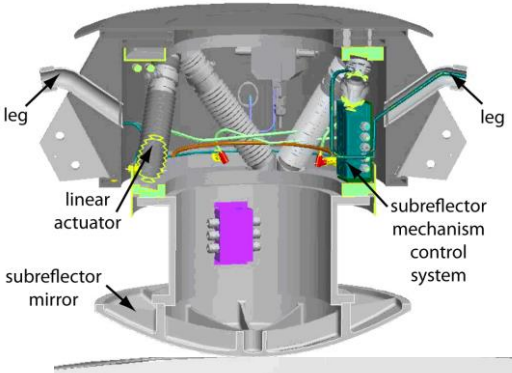
leg
leg
linear actuator
subreflector mechanism control system
subreflector mirror

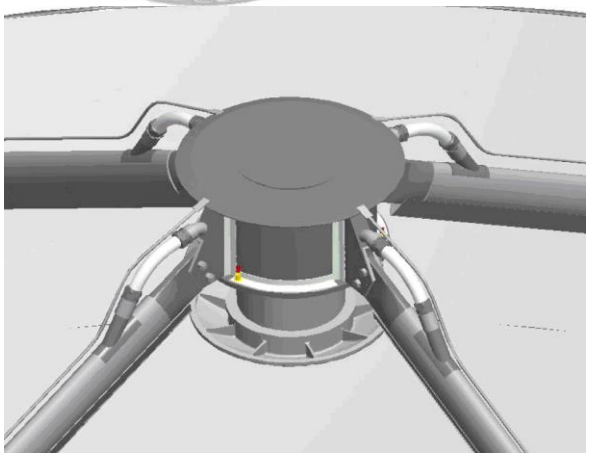

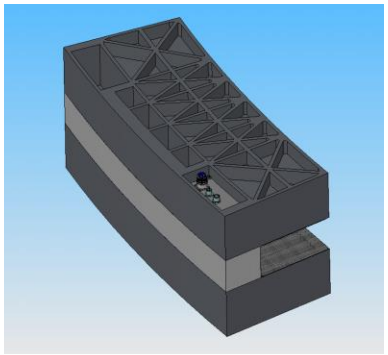

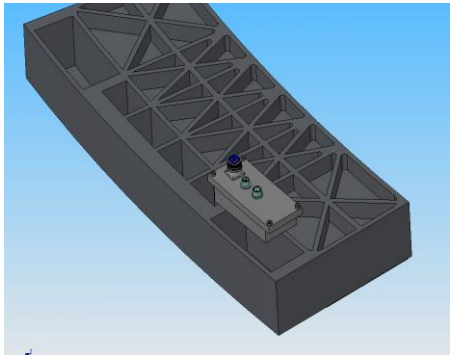

ThalesAlenia Space
A Thales / Finmeccanica Company

EUROPEAN INDUSTRIAL ENGINEERING

MT MECHATRONICS

European ALMA Antennae Project

ESO

ALMA

VENEZIA, 31 JANUARY 2007 PPDR: PRE-PRODUCTION DESIGN REVIEW

FEM MODEL VALIDATION

Same antenna performances can be evaluated only with the FEM model.

The goal for each test was to have a deviation between the FEM prediction and real measurement lower than the 20%.

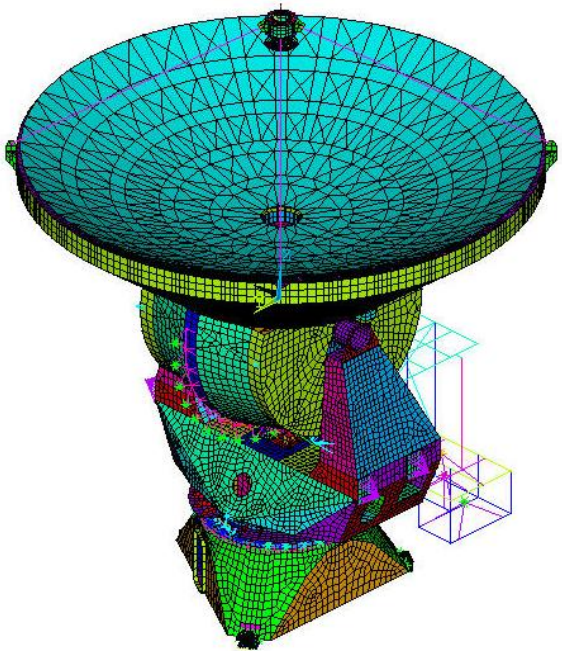

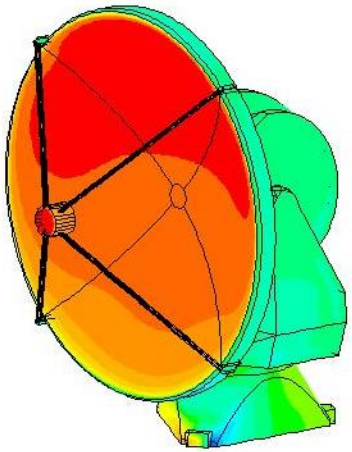

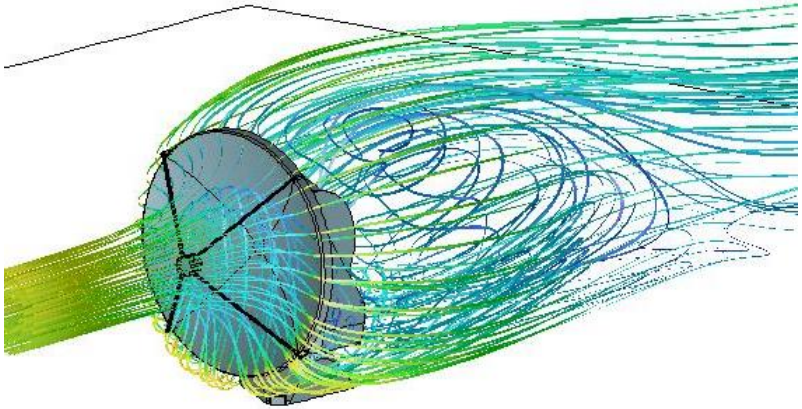

Dynamic metrology Performance Test

Pulling test and correlation formula validation

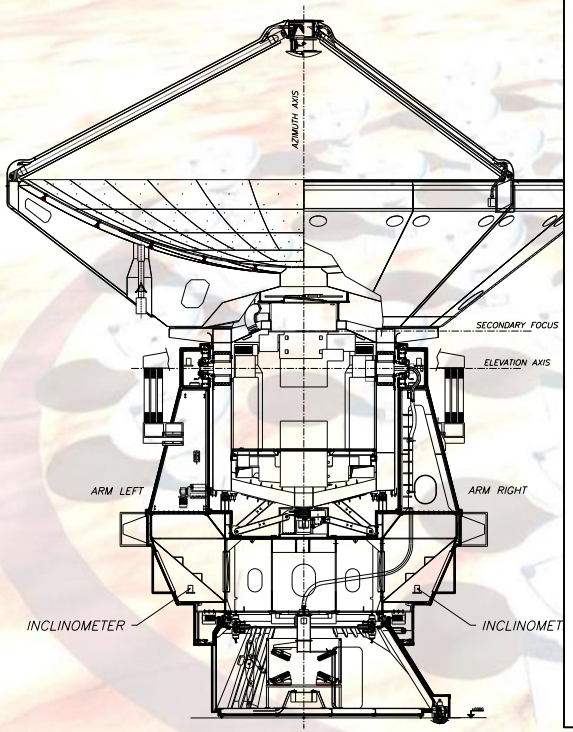

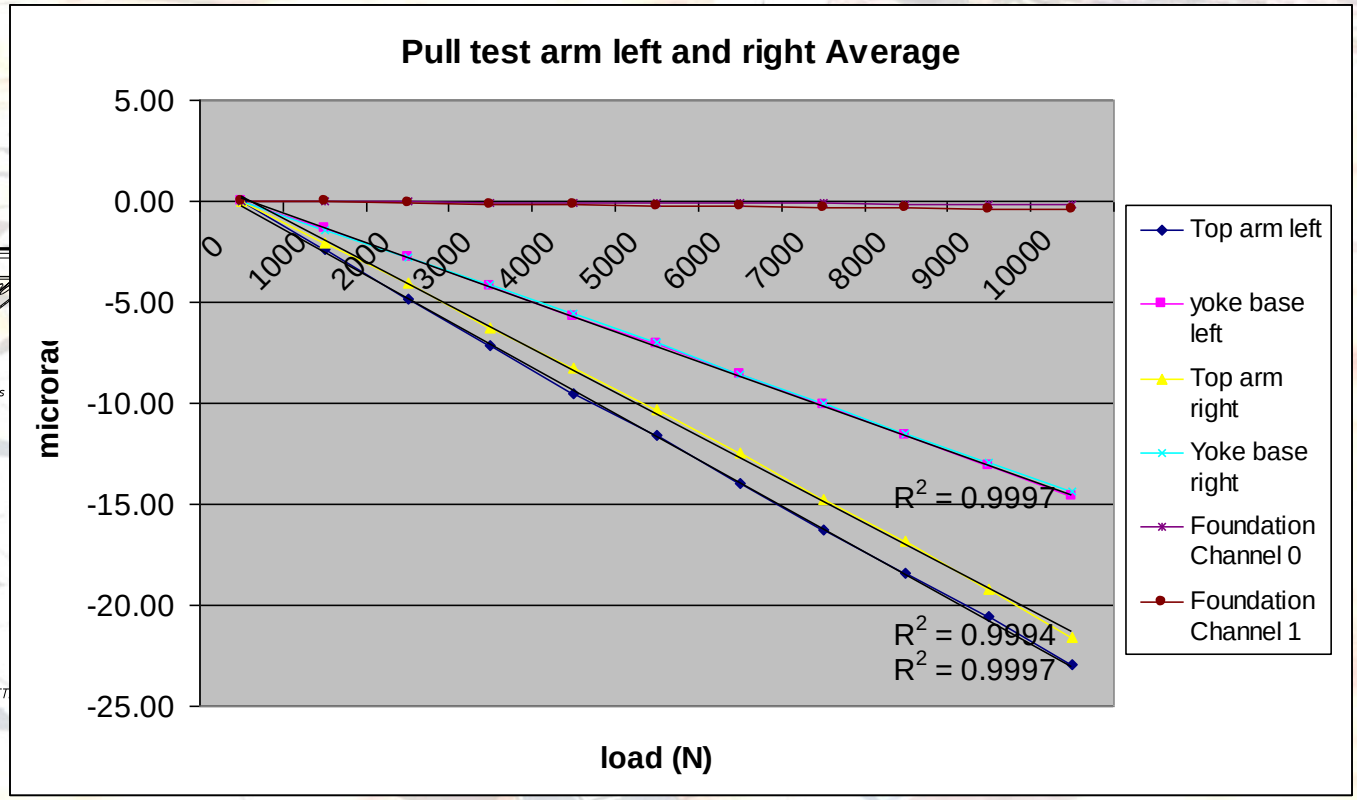

The comparison of the real behaviour with the Fem model showed a difference of about 6% in the correlation parameters

Thermal Metrology Performance Tests

Comparison between the API laser system and the results coming from the yoke arm metrology matrix.

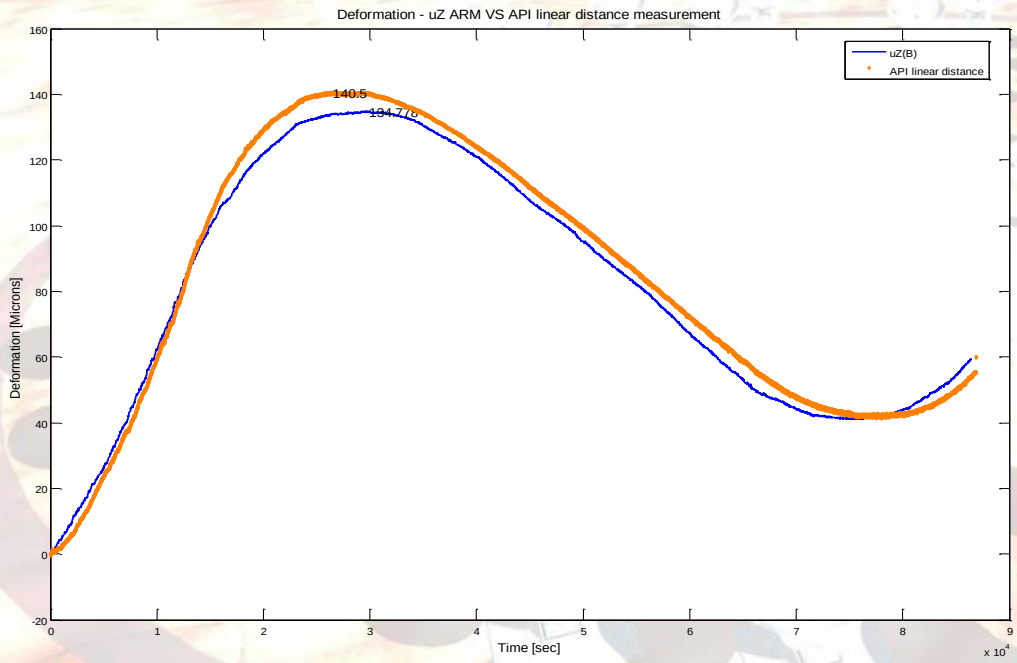

API measurement (red line) and the metrology measurement (blue line)

The comparison between the Yoke Arm Matrix and API measurement is good in terms of trend and amplitude.

SURFACE ACCURACY

The Antenna surface accuracy includes contributions from both primary reflector and subreflector.

The total surface accuracy during Primary Operating Condition must be < 25 micron RSS.

		DAY	NIGHT	DAY	NIGHT
		STEADY		GUST	
PANELS[1]		IN MICRONS		IN MICRONS	
	MANUFACTURING	4,5	4,5	4,5	4,5
	AGING	2,0	2,0	2,0	2,0
	GRAVITY	2,9	2,9	2,9	2,9
	WIND	0,0	0,0	0,0	0,0
	ABSOLUTE TEMPERATURE	0,0	0,0	0,0	0,0
	TEMPERATURE GRADIENT	0,0	0,0	0,0	0,0
	TOTAL PANEL RSS	**5,7**	**5,7**	**5,7**	**5,7**
BACKUP STRUCTURE[2]					
	GRAVITY (IDEAL)	9,3	9,3	9,3	9,3
	GRAVITY (Departure from ideal)	2,0	2,0	2,0	2,0
	WIND	0,0	2,1	1,1	2,3
	ABSOLUTE TEMPERATURE	9,1	9,1	9,1	9,1
	TEMPERATURE GRADIENT	6,6	0,0	6,6	0,0
	AGING and MOISTURE	2,0	2,0	2,0	2,0
	TOTAL BACKUP RSS	**14,9**	**13,5**	**14,9**	**13,5**
PANEL MOUNTING[1]					
	ABSOLUTE TEMPERATURE	0,0	0,0	0,0	0,0
	TEMPERATURE GRADIENT	0,0	0,0	0,0	0,0
	PANEL LOCATION IN PLANE	0,0	0,0	0,0	0,0
	PANEL ADJUSTMENT PERP. TO PLANE[3]	2,0	2,0	2,0	2,0
	GRAVITY	0,0	0,0	0,0	0,0
	WIND	0,0	0,0	0,0	0,0
	TOTAL MOUNTING RSS	**2,0**	**2,0**	**2,0**	**2,0**
SECONDARY MIRROR					
	MANUFACTURING	4,5	4,5	4,5	4,5
	GRAVITY	0,1	0,1	0,1	0,1
	WIND	0,0	0,0	0,0	0,0
	ABSOLUTE TEMPERATURE	1,0	1,0	1,0	1,0
	TEMPERATURE GRADIENT	1,0	0,0	1,0	0,0
	AGING	2,0	2,0	2,0	2,0
	ALIGNMENT (coma error)	1,8	1,8	1,8	1,8
	TOTAL SECONDARY MIRROR RSS	**5,4**	**5,4**	**5,4**	**5,4**
TOTAL ERROR EXCLUDING SURFACE ALIGNMENT		**16,9**	**15,7**	**17,0**	**15,8**
SURFACE ALIGNMENT ERROR (HOLOGRAPHY)		**14,7**	**14,7**	**14,7**	**14,7**
UNANTICATED ERRORS		**2,0**	**2,0**	**2,0**	**2,0**
TOTAL SURFACE ACCURACY ERROR		**22,5**	**21,6**	**22,6**	**21,6**

SURFACE ACCURACY

The results derived during the holography tests have been extended for the whole ALMA environmental primary conditions.

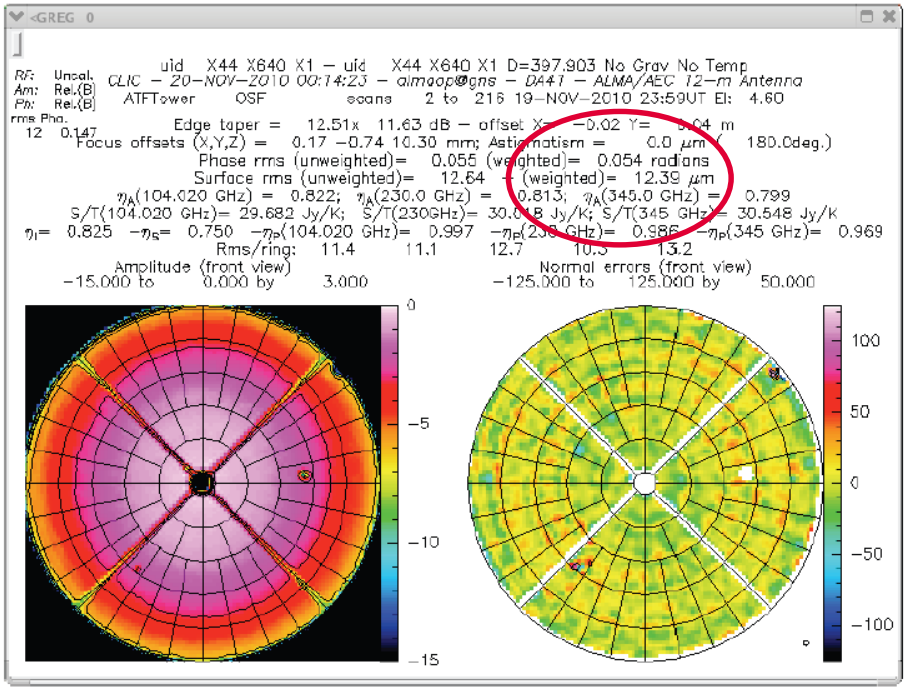

Holography map

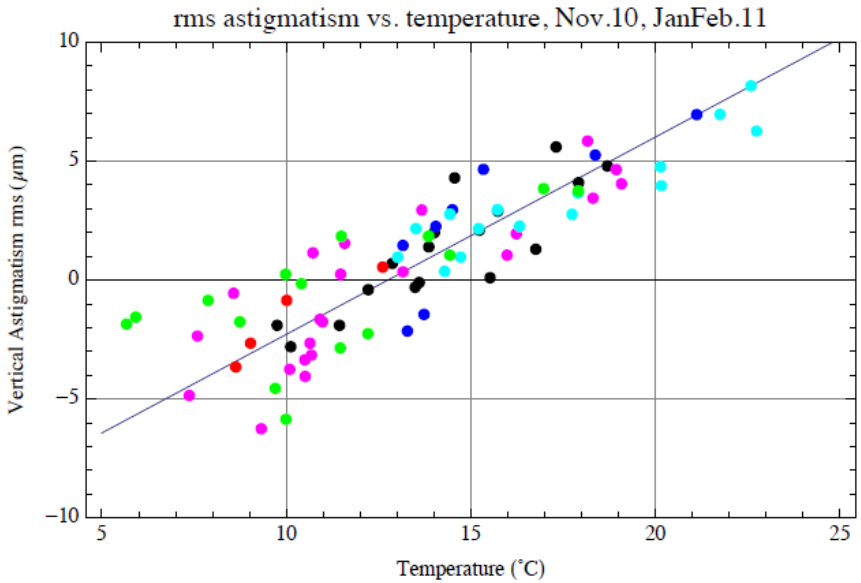

Surface accuracy behaviour with respect ambient temperature variation

POINTING ERROR

- Absolute Pointing Errors: < of 2.0 arcsec RSS in the whole sky travel range
- Offset Pointing Errors: < of 0.6 arcsec RSS when the antenna is pointed within 2 degrees from any starting position, tracking over a 15 minute period.
- Fast switching phase calibration: the antenna shall perform steps of 1.5 degrees and settle to within 3 arcsec peak pointing error, all in 1.5 seconds of time.
- On-the-fly total power mapping: the antenna shall scan at 0.5 deg/s on the sky across a target source of one degree in size, then turn around at a distance of 1 arcmin, settle within 0.8 sec scan back across the source within 2 arcsec RMS.
- On-the-fly interferometric mosaicking: the antenna will scan at a rate of up to 0.05 deg/s on the sky across a target source, then turn around and scan back across the source in the opposite direction within 1 arcsec RMS.

POINTING ERROR: OFFSET

The rms error at OSF, corrected for seeing, is 0.28 arcsec, with a worst case of 0.77 arcsec.

Thermal and dynamic metrology were setting on.
We note that a number of tests were performed at wind speeds in excess of 5ms−1.

Date	n hhmm	UT	Az deg	El deg	T C	dT/dt deg/hr	w ms^{-1}	σ_{meas}	σ_{s+t}	σ_{track} arcsec	σ_{osf}	σ_{aosmw}
20110522	2342	44	80	75	12.60	0.10	3.84	0.78	0.34	0.0287	0.62	0.66
20110523	0159	9	338	52	11.37	0.04	6.07	0.57	0.25	0.0306	0.45	0.40
20110523	0355	69	233	44	11.64	0.16	4.34	0.57	0.30	0.0254	0.38	0.44
20110525	0100	69	196	69	10.48	-0.45	4.50	0.76	0.29	0.0260	0.64	0.67
20110525	0330	9	309	38	9.47	0.10	4.47	0.45	0.31	0.0298	0.11	0.24
20110525	0423	89	211	19	9.29	-0.20	4.05	0.62	0.41	0.0241	0.22	0.33
20110525	0542	55	167	76	8.42	-1.59	2.15	0.60	0.53	0.0251	0.00	0.00
20110525	2336	50	254	66	12.69	0.12	3.55	0.29	0.25	0.0267	0.00	0.16
20110529	0120	30	41	59	15.30	-0.32	5.25	0.81	0.41	0.0341	0.57	0.58
20110529	0314	347	219	71	15.15	-0.42	4.17	0.83	0.23	0.0283	0.77	0.80
20110529	0510	229	270	36	14.51	-0.26	4.01	0.65	0.41	0.0299	0.30	0.38
20110529	0606	190	280	29	13.96	-1.35	1.71	0.63	0.65	0.0281	0.00	0.00
20110529	0702	30	281	22	12.93	-1.63	4.89	1.06	0.63	0.0304	0.58	0.60
20110607	0340	45	91	53	7.05	-1.10	1.47	0.62	0.49	0.0285	0.00	0.00
20110607	0436	72	228	61	6.98	-0.28	2.90	0.59	0.35	0.0259	0.32	0.42
20110607	0717	45	286	75	5.89	-0.09	1.73	0.60	0.38	0.0313	0.27	0.39
20110607	0820	45	273	60	6.00	-0.45	2.25	0.60	0.28	0.0275	0.45	0.53
20110608	0244	45	95	41	10.92	-1.03	2.71	0.50	0.40	0.0301	0.00	0.09
20110608	0336	20	28	38	10.49	0.00	3.72	0.47	0.42	0.0300	0.00	0.00
20110608	0440	99	206	33	9.74	-1.88	5.41	0.56	0.41	0.0235	0.00	0.00
20110608	0612	25	5	28	9.72	-0.32	3.12	0.51	0.37	0.0266	0.00	0.24
20110608	2332	72	125	47	10.26	-0.70	4.82	0.44	0.38	0.0406	0.00	0.00
20110609	0258	20	37	34	9.91	0.63	4.20	0.64	0.42	0.0307	0.24	0.33
20110609	0350	55	136	70	9.50	-1.14	3.56	0.74	0.33	0.0242	0.58	0.63
20110609	0436	25	25	23	9.14	-0.10	2.88	0.63	0.55	0.0270	0.00	0.00
20110609	0539	20	349	42	9.08	-0.37	4.09	0.42	0.33	0.0290	0.00	0.13

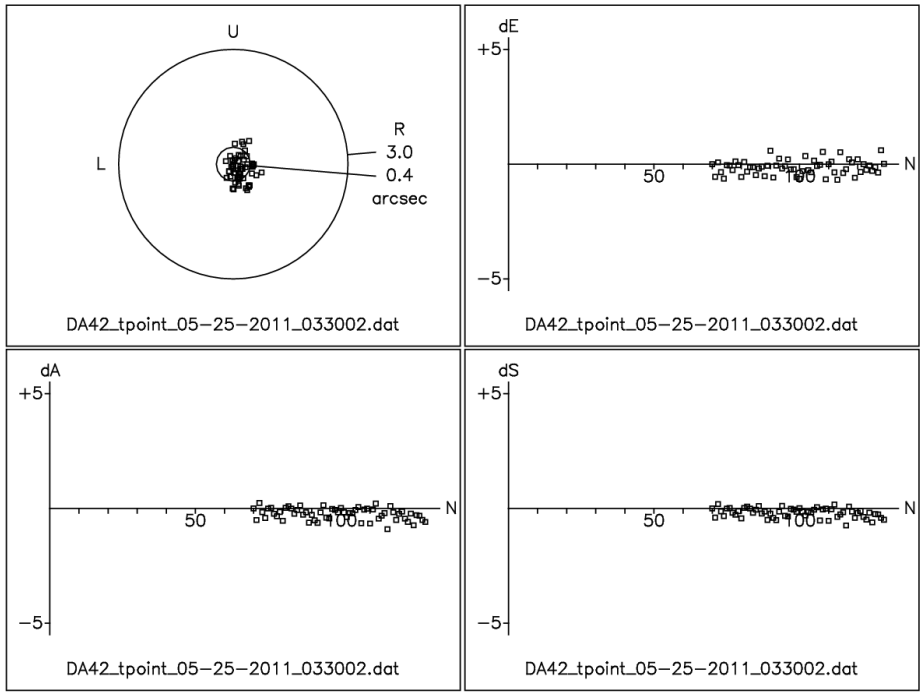

TPOINT plots of the residuals for the test on May 25, 2011, at 0330 (σ_{aosmw} = 0.24 arcsec.)

Derived Offset Pointing Error at AOS 0.24 arcsec.

POINTING ERROR: ON THE FLY

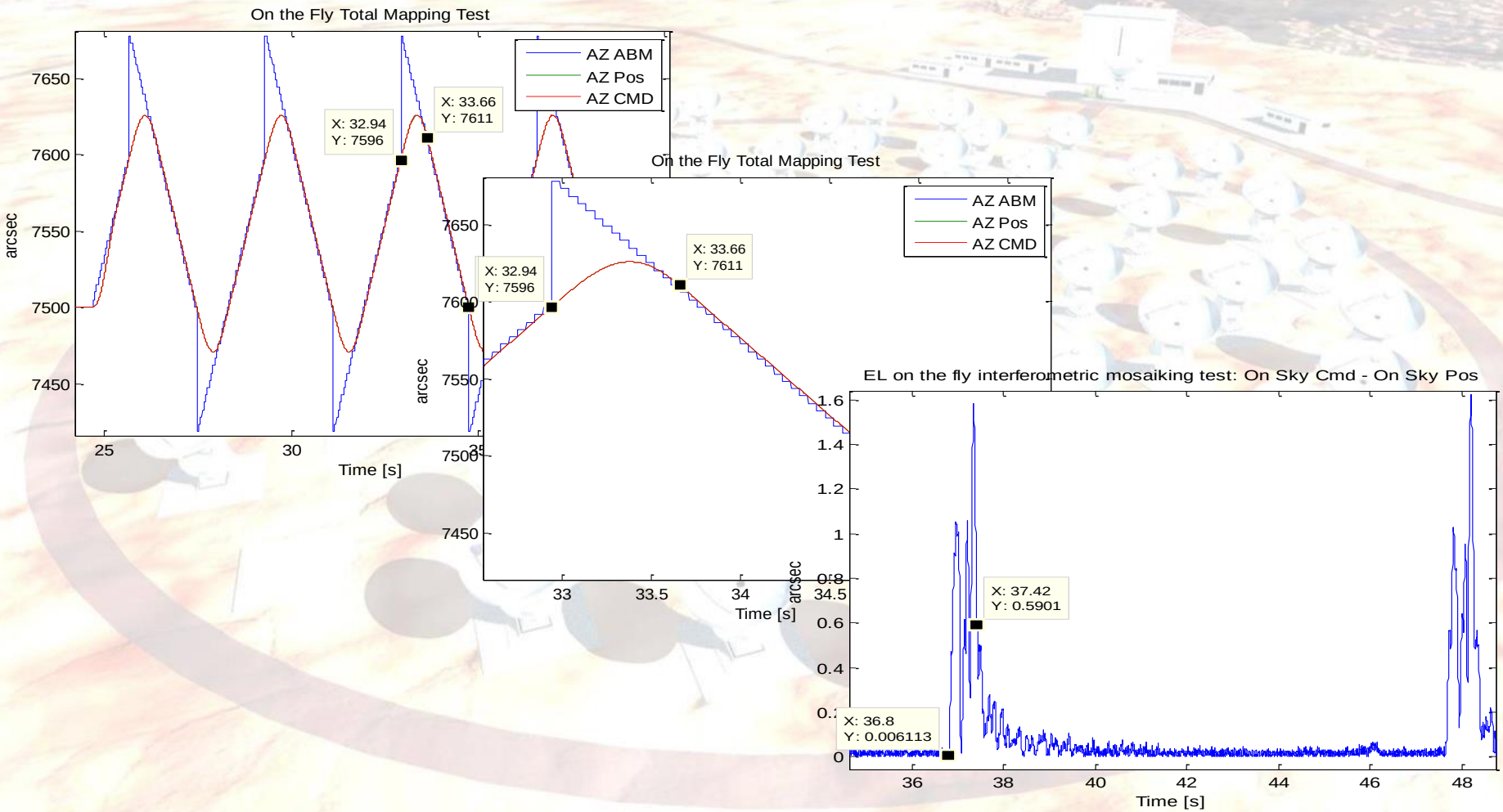

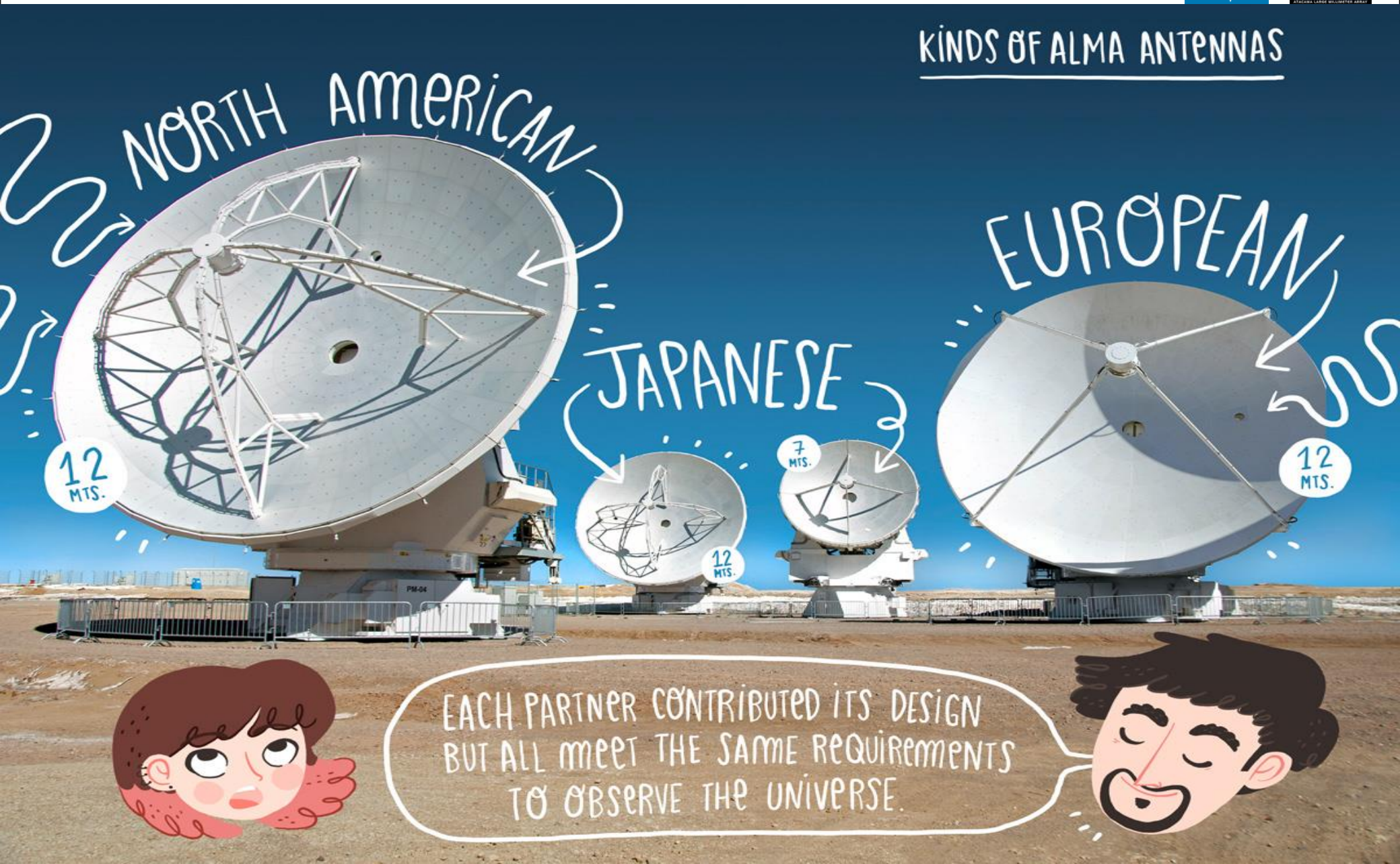
KINDS OF ALMA ANTENNAS
NORTH AMERICAN
12 MTS.
JAPANESE
12 MTS.
7 MTS.
EUROPEAN
12 MTS.
EACH PARTNER CONTRIBUTED ITS DESIGN BUT ALL MEET THE SAME REQUIREMENTS TO OBSERVE THE UNIVERSE.